# Prevention and Management of Woodpecker Damage to Buildings

Montana Department of Agriculture
P.O. Box 200201
Helena, MT 59620-0201

Rev. 9/30/2022

The sights, sounds and activities of birds provide pleasing, esthetic experiences for most people. Bird calls, colorful plumage, nesting activities, visits to bird feeders and rearing of young all bring us closer to our natural heritage and raises our awareness of the environment.

However, on occasion woodpeckers conflict with human interests, such as when woodpeckers and flickers damage structures and valuable trees. This bulletin explains how to resolve conflicts with woodpeckers and flickers.

## Description

Twelve species of woodpeckers occur in Montana. They are characterized by short legs with opposable sharp-clawed toes and stiff tail feathers. These features allow woodpeckers to cling to tree trunks, wooden house sidings and utility poles. Sharp pointed strong beaks and specially constructed skull enables woodpeckers to peck and drill holes in wood. Elongated tongues provide the means to search out and feed on ants, larvae and other insects present in the wood.

Woodpeckers are 7 to 15 inches in length. Their feathers often have spotted or barred markings with colorations of black and white. Others have brightly colored feathers on the head or breast. Flickers have reddish or yellow colored underwing and under tail feathers (Fig. 1). The flight pattern of most species is an undulating, gliding motion with wings folded next to the body following a series of wing beats.

## Range

Woodpeckers are found throughout Montana. Species found in the western part of the state include the Lewis's woodpecker (*Melanerpes lewis*), Williamson's sapsucker (*Sphrapicus thyroideus*), red-naped sapsucker (*Sphrapilcus nuchalis*), American three-toed woodpecker (*Picoides dorsalis*), black-backed woodpecker (*Picoides arcticus*) and the pileated woodpecker (*Dryocopus pileatus*). The red-headed woodpecker (*Melanespes erythrocephalus*) occurs in eastern Montana. Woodpeckers occurring throughout the state include, the hairy woodpecker (*Picoides villosus*), northern flicker (*Colaptes auratus*), northern flicker (red-shafted; *Colaptes auratus cafer*), northern flicker (yellow-shafted; *Colaptes auratus auratus*) and downy woodpecker (*Picoides pubescens*).

Most species remain in the same area year-round, although some species, such as Lewis's woodpeckers, red-headed woodpeckers and sapsuckers are migratory. Most species are territorial although some live in small, loose social groups.

For additional information on these species visit Montana Field Guide at http://fieldguide.mt.gov/default.aspx.

Fig. 1. Northern flicker.

## Biology, Behavior and Reproduction

Woodpeckers usually live in, or on, the edge of wooded areas. Most woodpeckers peck at wood in search of wood-boring and wood damaging insects present under the bark. Sapsuckers, however, feed on tree sap and the insects that become trapped by the sap. Woodpeckers also feed on nuts, berries, seeds and fruit.

Woodpeckers make nest or roosting sites, or to establish territory, create circular holes when they want to establish a nesting site. Typically, pecking for food and shelter are done on trees that are already dead (i.e. snags) or severely weakened. Sometimes woodpeckers target structures, such as buildings, utility poles and fence posts.

But woodpeckers also peck to establish territories and find mates in a behavior called "drumming." Drumming usually occurs between February and July and sometimes in the fall. The woodpecker selects a surface that will provide a suitable sound and then proceed to peck in a manner that is rhythmical, rapid and loud.

Woodpeckers breed in the spring, laying three to six eggs. Naked or down covered chicks are hatched after 11 to 14 days of incubation. Both parents rear the young.

## Damage

Woodpeckers interfere with human interests by damaging buildings made of wood. Woodpeckers also attack Exterior Insulation and Finishing System (EIFS) buildings as the hardened surface is easily penetrated. Once inside the birds can excavate the foam insulation quickly. Woodpeckers likewise damage trees and make excessive noise.

Woodpecker damage most often occurs in February through June, corresponding to the breeding season and territory establishment. Damage to structures can be classified based on the reason for the woodpecker's behavior, namely to build a nest or roost cavity, drumming to establish territory, or feeding to access insects, such as the California carpenter bee (*Xylocopa californica*) that may be beneath the wooden siding. Summer or vacation homes that are vacant part of the year may be particularly vulnerable. Woodpeckers can cause severe and costly damage to utility poles. Similar damage has been reported by ranchers and farmers on fence posts. Drumming activity may mar the surface of wood but rarely causes substantial damage. However, the noise may become a nuisance, especially in early morning hours.

Most woodpeckers attack trees that are already weakened by insects, disease or fire. Sapsuckers, however, will attack healthy trees. They typically peck a series of parallel holes in tree trunks and limbs (Fig. 2). The holes fill with sap which the birds consume along with any attracted or entrapped insects. If the damage is limited, trees will usually recover. But in some instances, the trees will be weakened and the holes will allow disease and insect damage to enter the tree. "Bird pecks" may also decrease the value of commercial hard and soft woods. Pileated woodpeckers are another exception in that they will excavate nesting sites in healthy trees.

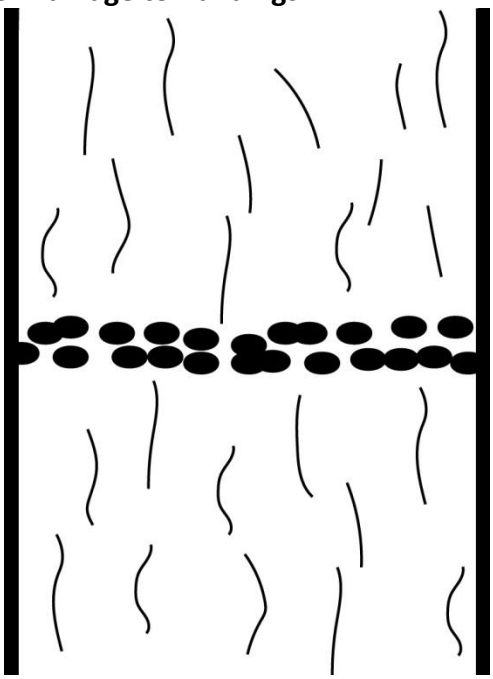

Fig. 2. Sapsuckers create ¼-inch holes across a tree trunk.

**Not all woodpeckers are created equal.**

Some woodpeckers are known as strong excavators meaning they can create cavities in trees more easily than other species of woodpeckers.

Strong excavators include: the northern flicker, pileated woodpecker, white-headed woodpecker, red-naped sapsucker, hairy woodpecker, downy woodpecker and black-backed woodpecker. Weak excavators include Lewis's woodpecker and other sapsuckers.

## Laws

Woodpeckers are classified as migratory, nongame birds and are protected by the Federal Migratory Bird Treaty Act. This treaty, between Mexico, United States, Canada and Russia, prohibits the harming or killing of protected birds listed under the Act. The Act does allow non-lethal methods to control bird damage, such as scaring and harassing, provided the birds are not: a) eagles, threatened or endangered species; b) killed or injured or c) birds sitting on active nests (nests with eggs or chicks present).

If non-lethal control methods fail to reduce or eliminate the damage, landowners may apply for a

permit to use lethal control methods to stop the damage. Permits may be obtained from the U.S. Fish and Wildlife Service at https://www.fws.gov/forms/3-200-13.pdf or e-mailing permitsR6MB@fws.gov. At this time, Montana Fish, Wildlife & Parks does not require an additional state issued depredation permit for the lethal control of woodpeckers.

Presently, Montana lists four species of woodpeckers as species of concern (Figs 3-6). Montana Species of Concern are native animals breeding in the state that are considered to be "at risk" due to declining population trends, threats to their habitats, and/or restricted distribution.

Fig. 3. Red-headed woodpecker is a species of concern in Montana.

Fig. 4. Pileated woodpecker. Species of concern in Montana.

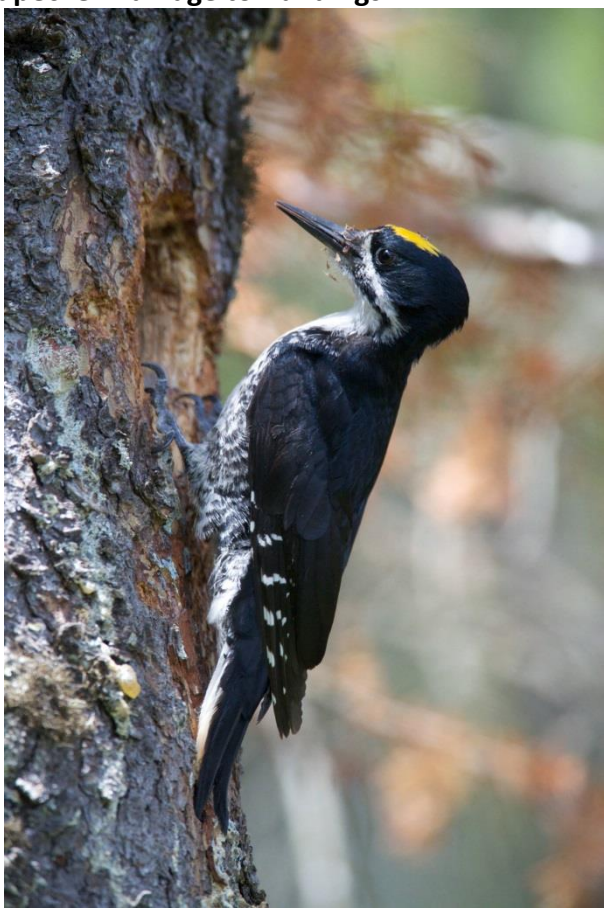

Fig. 5. Black-backed woodpecker is a species of concern in Montana.

Fig. 6. Lewis's woodpecker is a species of concern in Montana.

## Damage Control and Prevention

Since the law mandates that landowners employ non-lethal methods before permission is granted for lethal control, this bulletin will focus on methods that do not require a federal depredation permit. Understand that each case of woodpecker damage must be carefully assessed to determine the control

method best suited to the situation. There is no one control that will work in all cases and many cases may require a combination of methods outlined below. Landowners are advised to respond to woodpecker damage quickly by using frightening devices and repairing holes. Failure to act quickly may result in the woodpecker(s) becoming attached to the area resulting in more damage and greater difficulty in resolving the problem.

## Building Design & Maintenance

Woodpeckers tend to damage wood-sided structures with earth-tone coloration and surrounded by trees. Avoid using earthtone-colored paints or stains and keep trees away from the structure. Woodpeckers also frequently chisel structures made from reverse board-and-batten siding (Fig. 7). This attraction may be due to its insect friendly design and/or the hollow sound created when pecked, which convinces woodpeckers that the wood is rotted or insect infested.

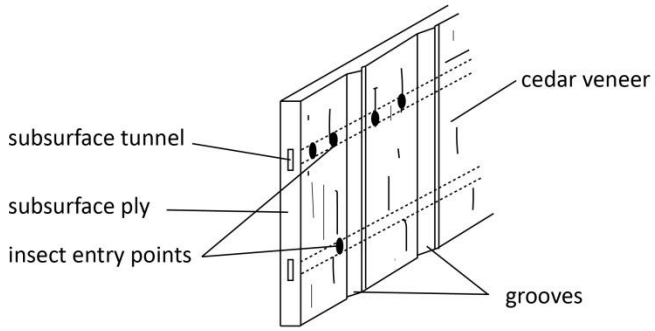


Fig. 7. Reverse board and batten siding diagram.

Whenever practical, construct building exteriors using materials that can resist pecking, such as stone, Masonite, aluminum or other hard material. Likewise, modifications to siding that can deaden the sounds created during pecking may be sufficient to encourage the woodpecker to move to a different location.

In addition, keep the structure free of wood-damaging insects. While most damage to houses is due to drumming or nesting behavior, sometimes woodpeckers attack structures due to insect infestation.

Several design solutions and treatments have been marketed claiming to stop woodpecker damage to EIFS buildings, including EIFSarmour™. We are not aware of any peer-reviewed or independent research validating these claims. We encourage property owners to investigate claims and warranties carefully before buying.

## Exclusion

Netting, when properly installed and maintained, prevents woodpecker access to building sidings beneath the eaves (Fig. 8). Protect walls by hanging ¾–inch weave bird netting from eaves. Netting must be at least 3 inches away from the surface it intends to protect. Secure the netting at the base and sides to prevent woodpeckers from flying around the barrier. If damage is a frequent occurrence, install hooks to allow for the hanging of netting during pecking season (typically Spring and Fall) and easy removal.

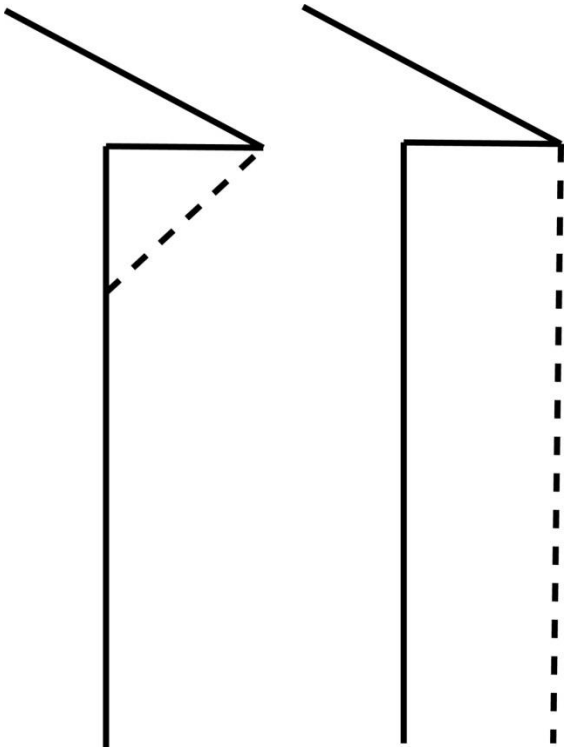

Fig. 8. (Left) Net installed to protect area under eave. (Right) Netting installed using hooks to protect the entire side of a house.

Metal or plastic barriers, such as flashing, sheathing or sheeting can be placed over damaged areas to prevent further damage. Cover damage as soon as possible. Occasionally the birds will move over to an unprotected area and the protective covering will have to be expanded. The sheathing can be painted or textured to match the wall.

Hardware cloth has been found to be effective in preventing most woodpecker damage to surfaces.

Use ¼-inch, 9-gauge, galvanized and welded wire mesh. When confronted with larger woodpeckers, such as the pileated woodpecker, use heavier gauge mesh. To maintain building aesthetics, paint the mesh to match the building's color. When protecting trees, be sure to overlap wraps to allow for future growth. In addition, avoid laying wraps directly on the bark surface. Use dowels or other items to keep the wrap off the bark. Even a small gaps help allow water to pass through and reduce risk of rot.

Repair holes as soon as possible to prevent them from excavating a den and doing more damage. Some evidence suggests that woodpeckers are attracted to areas that exhibit woodpecker damage. Thus damaged areas should be repaired to prevent woodpeckers from returning at a future time or used by other cavity nesting birds.

**Wood treatments.** Application of a polyurea-elastomer material (1.78 mm thickness) to wooden cross arms of utility poles has proven effective in resisting damage by pileated woodpeckers. Other wood treatments, such as creosote and ammoniacal copper zinc arsenate (ACZA; Chemonite®) have shown some protective properties. Elastomeric acrylic finish paint is marketed as a woodpecker deterrent. Unfortunately, we are unaware of any research on the effectiveness of this paint.

## Frightening Devices

Frightening devices attempt to scare the woodpeckers away by evoking a fear response. Frightening devices are categorized into audible, visual, audio-visual, and biological. For best results, use as many different types of devices at once as practical. Devices that move and/or only activate when the birds are present will be more effective than those that don't.

**Never use frightening, hazing or repellants on nesting woodpeckers or woodpeckers with young.**

**Audible Devices**. Threatening or loud sounds, such as hand clapping, cap guns, banging on garbage can lids, etc. will frighten woodpeckers away for short periods of time. If noises are repeated persistently, woodpeckers may leave the area for good. Propane exploders, while too noisy to use in residential or home areas, may help discourage woodpeckers in orchards and tree areas for a couple of days. High frequency sound devices, such as ultrasound have not been shown to effectively repel woodpeckers.

**Visual Devices**. Visual frightening devices are preferred by most property owners because they are relatively inexpensive and do not disturb neighbors. Devices that flash or reflect light and can sway with the wind, such as strips of aluminum foil or Mylar™, tin lids, balloons or pie pans have had some success. One research study found that hanging ½-inch wide strips of Irri Tape™ near the affected area frightened woodpeckers away 50 percent of the time (Fig. 9). Wildlife control operators have reported good results by suspending Halloween spiders, that when sensing motion, drop by means of a cord or using The Intimidator – Woodpecker/Avian Deterrent.

Fig. 9. Irri Tape™ suspended from an eave.

Other devices, such as plastic twirlers or windmills, which move and reflect light, can be attached to the eaves near the damaged area. These methods have been somewhat successful in scaring away damaging woodpeckers. Hanging silhouettes of hawks and balloons with large eyes painted on them have also been used with some success. Effectiveness is often temporary as the woodpeckers become accustom to the device.

Stationary frightening devices that do not move, such as models of owls and snakes are usually ineffective for frightening away woodpeckers.

**Audio-Visual Devices.** As the name suggests, audio-visual devices combine sound and sight to frighten birds. Combining any of the audio and visual devices mentioned above will create an audio-visual device. While extensive research on the combined effect of sound and sight frightening devices has not been done on woodpeckers, it is believed that multiple devices work better than when used alone.

**Biological Devices.** Biological devices frighten by taking advantage of instinctual fears. Audio recordings of woodpeckers in distress and screeches of hawks are available. Unfortunately, research has not shown these devices effective at this time.

## Hazing

Woodpeckers can be scared away by spraying water from a hose, approaching them, throwing objects near them, etc. Though effective, hazing is quite time-consuming and requires your efforts to outlast the bird's persistence. Be sure that your hazing activities do not injure the bird to avoid violating federal law.

## Repellants

Repellants are chemicals used to cause an animal to leave an area or stop a particular behavior. Application must follow the label, meaning, woodpeckers or birds, must be listed on the label, because the label is the law. Repellents may discolor surfaces. Test products on a small area before applying to a large area or protect surfaces with a suitable barrier.

**Taste repellants.** Taste repellents, such as capsaicin (the chemical that makes hot peppers hot), denatonium saccharide (a bitter-tasting chemical) or methyl anthranilate (a grape derivative that irritates nasal passages of birds) require animals to taste/eat in order to be effective. Since most woodpecker damage to structures does not involve eating, these products have not proven sufficiently effective to recommend their use.

**Odor repellents.** Mothballs have not been proven effective in stopping woodpecker activity.

**Tactile repellants.** Polybutene-based gels are registered for repelling birds from surfaces. These gels are sticky and irritate birds that come into contact with them. They may be applied to trees, branches and building surfaces. Avoid applying polybutene repellents directly to structural surfaces or other sensitive surfaces to prevent discoloration. Instead, apply gel to adhesive tape, boards or other removable surfaces that can allow the gel to be removed easily. Dust will reduce the gel's effectiveness over time. In low dust areas, gel can remain tacky for up to a year. Do not apply more gel than suggested by the label as excessive application may entrap birds.

## Toxicants

No toxicants are registered for the control of woodpeckers.

## Diversionary Feeding

Diversionary feeding is the tactic of providing food in the hopes of distracting an animal from an area where you do not want it. Some evidence has shown that woodpeckers will transfer their attention from a building to suet when available (Fig. 10). To protect plants and birds from injury from soft and melting suet, use no-melt suet when temperatures reach 80° F or higher.

Fig. 10. A downy woodpecker enjoying a suet feeder.

## Nest Boxes

Installation of nest boxes have been reported to be effective in stopping woodpeckers that are chiseling (creating holes) to create nests or roosting locations (see appendices). Nest boxes are not effective when woodpeckers are drumming or feeding.

Nest boxes should measure 22 to 26 inches in height with inside floor dimensions of 6 by 6 inches. The entrance hole should measure about 2½ inches in diameter and be placed 16 to 20 inches above the floor. A hinged, slanted roof will shed rain and allow access. A thick layer of sawdust should be placed in the bottom of the box. Some suggest filling the nest box with saw dust to fool the woodpecker into thinking he has excavated the nest/roost. Since nest construction is an important part of the mating ritual, filling the nest box may be a useful idea. For best results, install more than one box. Place at least one near the site of the damage. Place others on different sides of the structure. Some species of woodpeckers, such as flickers and pileated woodpeckers, will use artificial cavities and boxes as nesting sites.

## DEPARTMENT SERVICES

As with most programs, control of vertebrate pests will be most effective when all affected landowners work together. The Montana Department of Agriculture vertebrate pest specialist program will work with county commissioners, extension agents and landowners to establish a program suited to local and county needs. Field demonstrations are provided to inform landowners how, when and where to control woodpeckers and other pests including rodents. Interested individuals should contact the Montana Department of Agriculture.

In Lewistown:
Stephen M. Vantassel, CWCP, ACE
Vertebrate Pest Specialist
Phone (406) 538-3004
svantassel@mt.gov
https://agr.mt.gov/Vertebrate-Pests

Additional printed information on the control of other vertebrates is available from the Montana Department of Agriculture website https://agr.mt.gov/Vertebrate-Pests.

**MONTANA POISON CONTROL**
**(Emergencies) 1-800-222-1222**

**MONTANA DEPARTMENT OF PUBLIC HEALTH & HUMAN SERVICES**
**Public Health & Safety**
**1-406-444-4141**
**https://dphhs.mt.gov/**

Disclaimer: Reference to commercial products or trade names is made with the understanding that no discrimination is intended of those not mentioned and no endorsement by the Montana Department of Agriculture is implied for those mentioned.

## Credits

Cover image: unknown
Fig. 1. Dave Menke/USFWS
Fig. 2. Stephen M. Vantassel/Montana Department of Agriculture
Fig. 3. Dave Menke/USFWS
Fig. 4. Michelle Smith/USFWS
Fig. 5. Ryan Hagerty/USFWS
Fig. 6. Dave Menke/USFWS
Figs. 7-8. Stephen M. Vantassel/Montana Department of Agriculture
Figs. 9-10. Stephen M. Vantassel, Wildlife Control Consultant, LLC.

## Appendices

The Montana Department of Agriculture gratefully acknowledges the Minnesota Department of Natural Resources for graciously permitting us to reprint the diagrams for the Northern Flicker Nest Box and Pileated Woodpecker Nest Box.

## Northern Flicker Nest Box

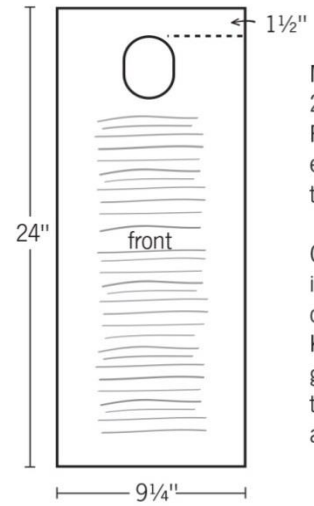


Make entrance hole 2½" x 3¼". See Figure 31 for entrance hole template.

Cut kerfs on all inside walls and outside front of box. Kerfs are ¼" deep grooves cut by a table saw or radial arm saw.

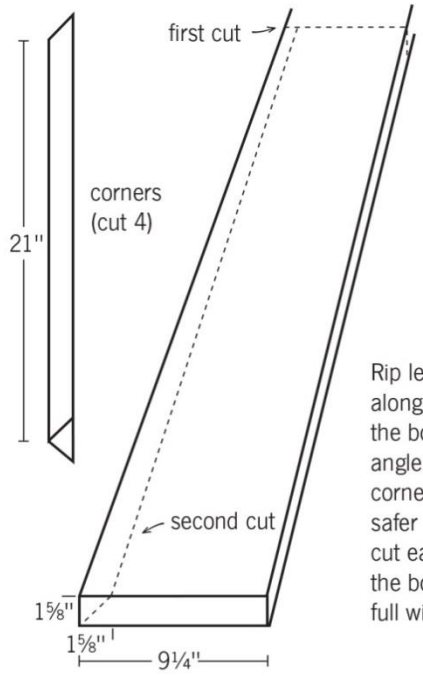


Rip lengthwise along the edge of the board at a 45° angle to create the corner pieces. It is safer to make this cut early on while the board is still full width.

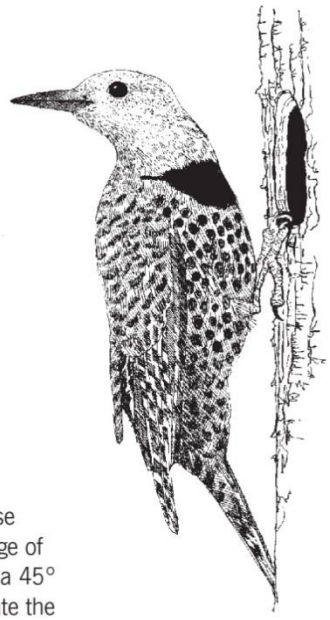

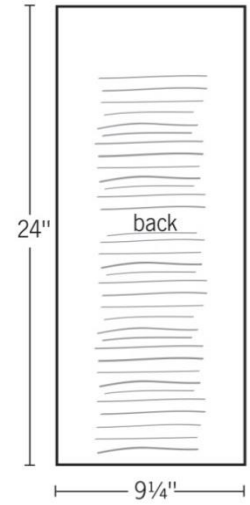


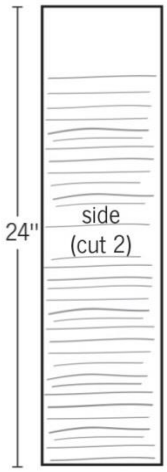


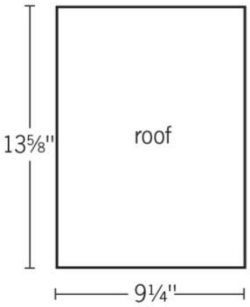


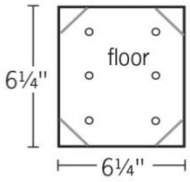


Place corners inside box to create a rounder room.

Drill drain holes.

Materials: 24 2½" galvanized deck screws and 5 gallon bag of wood shavings.

**Completed Box**

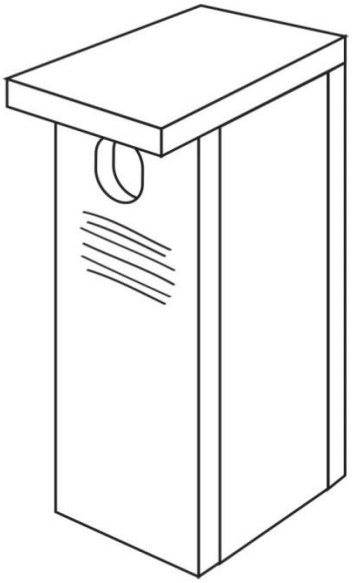

Lumber: 2" x 10" x 10'

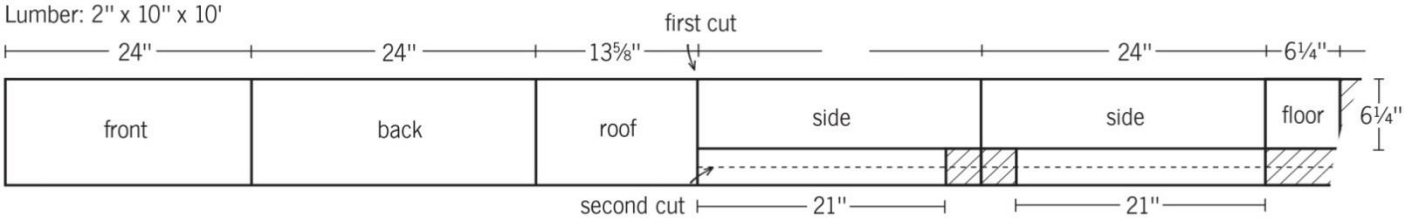


© 2009 MN DNR.

## Common Merganser and Pileated Woodpecker Nest Box

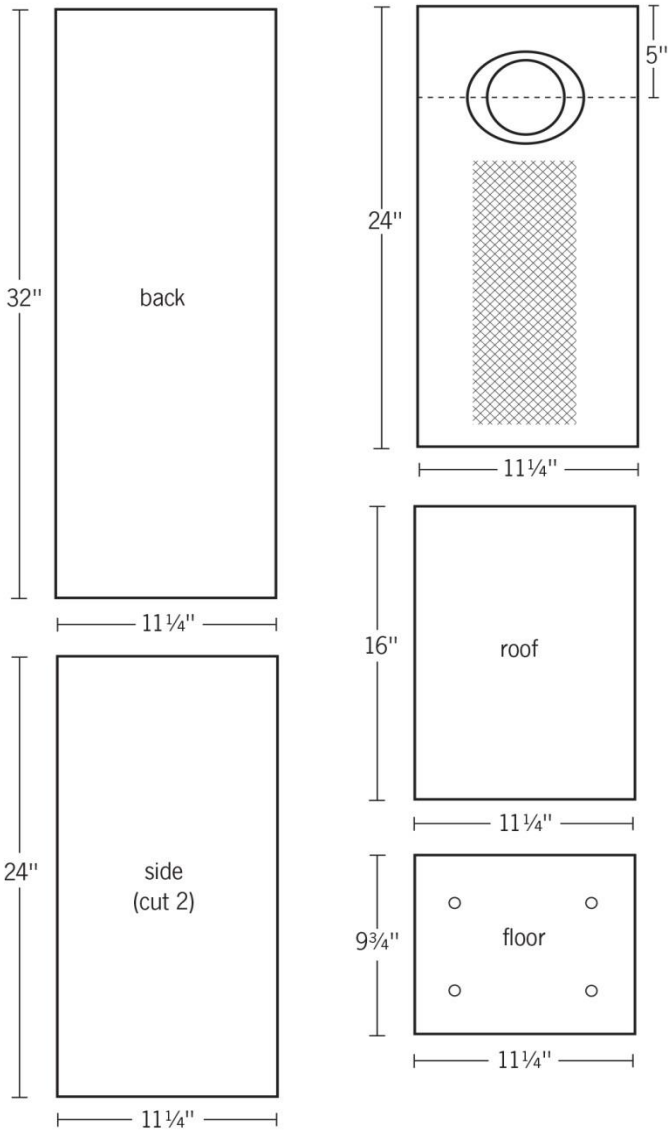


To make a Pileated Woodpecker nest box—use a 4" round entrance hole. For Common Merganser use a 6" by 5" oval-shaped hole. See Figure 31 for template.

Staple ¼"-mesh-hardware cloth to the inside of the front.

**Completed Box**

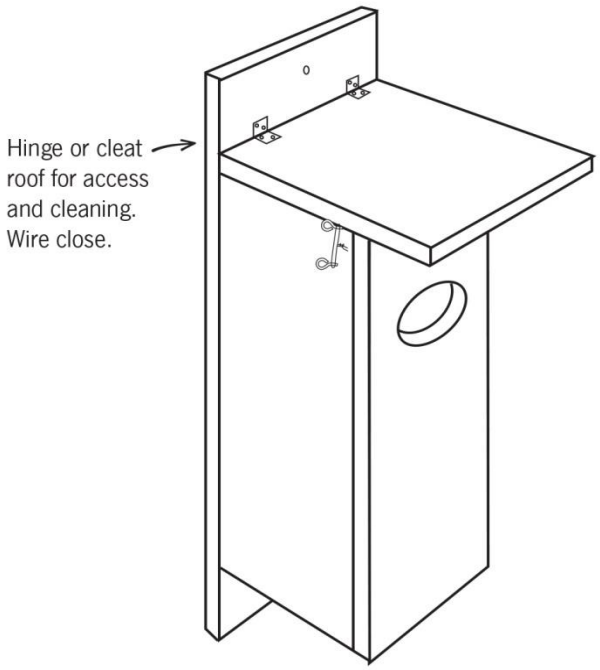


Put 3 to 4 inches of woodshavings in the bottom of the box for mergansers.

Lumber: 1" x 12" x 12' (for Pileated Woodpeckers, use a 2" x 12" x 12' board and make the floor section 8¼" long instead of 9¾" long).

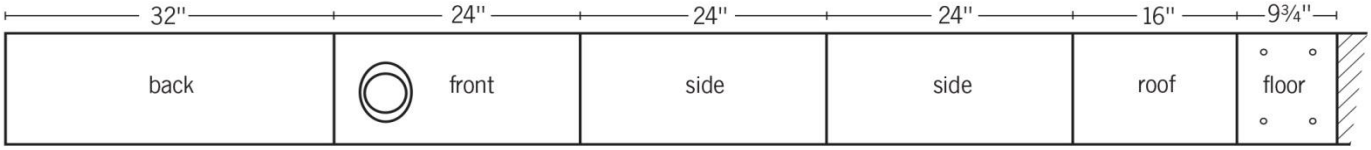


© 2009 MN DNR.